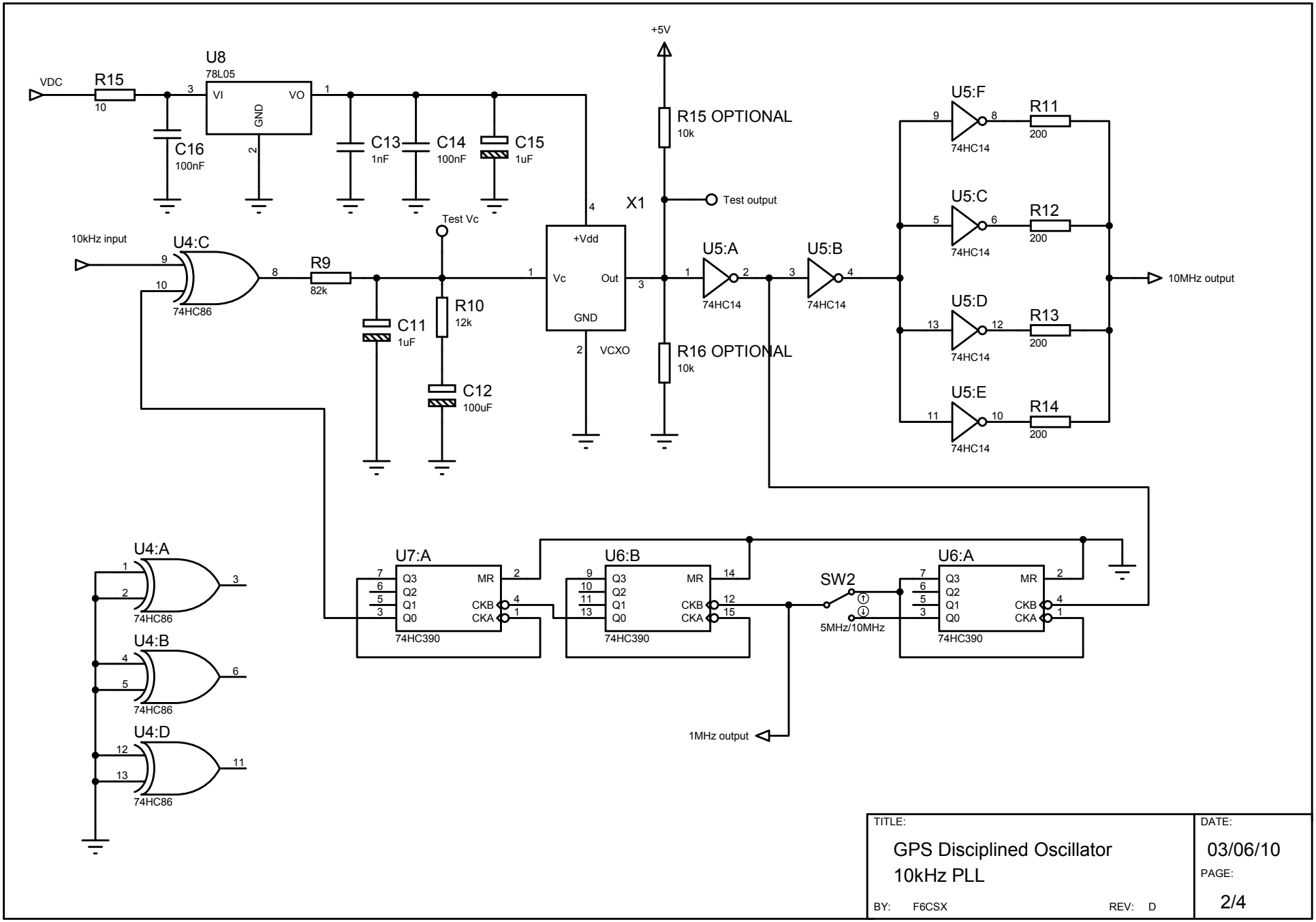

TITLE:	DATE:
GPS Disciplined Oscillator 10kHz PLL	03/06/10
BY: F6CSX REV: D	PAGE: 2/4