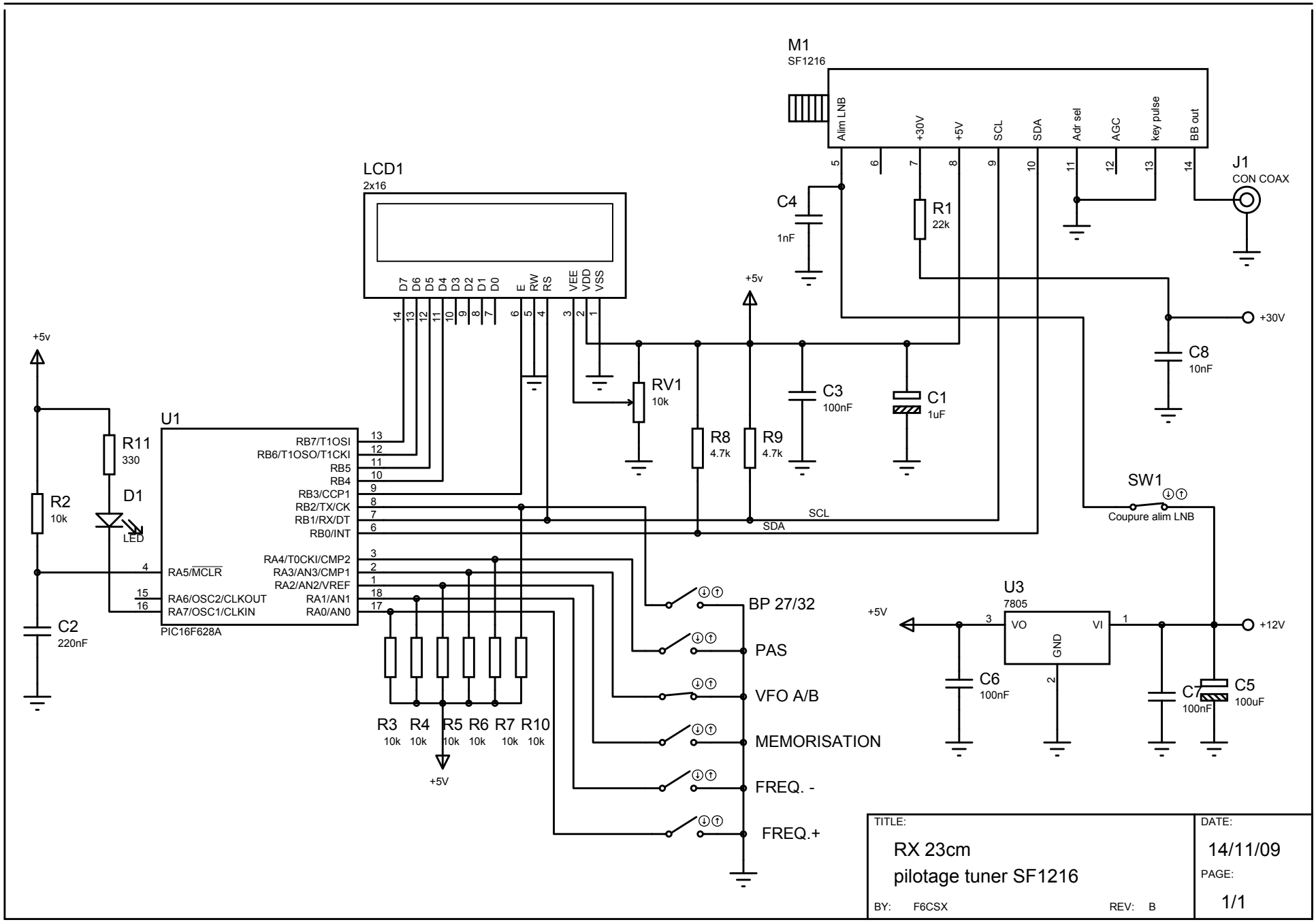
M1
SF1216
Alim LNB
+30V
+5V
SCL
SDA
Adr sel
AGC
key pulse
BB out
J1
CON COAX
C4
1nF
R1
22k
LCD1
2x16
D7 D6 D5 D4 D3 D2 D1 D0 E RW RS VEE VDD VSS
+5v
+30V
C8
10nF
RV1
10k
C3
100nF
C1
1uF
R8
4.7k
R9
4.7k
U1
R11
330
D1
LED
R2
10k
C2
220nF
RB7/T1OSI
RB6/T1OSO/T1CKI
RB5
RB4
RB3/CCP1
RB2/TX/CK
RB1/RX/DT
RB0/INT
RA4/T0CKI/CMP2
RA3/AN3/CMP1
RA2/AN2/VREF
RA1/AN1
RA0/AN0
RA5/MCLR
RA6/OSC2/CLKOUT
RA7/OSC1/CLKIN
PIC16F628A
SCL
SDA
SW1
Coupure alim LNB
BP 27/32
PAS
VFO A/B
MEMORISATION
FREQ. -
FREQ.+
R3 R4 R5 R6 R7 R10
10k 10k 10k 10k 10k 10k
+5V
U3
7805
VO
VI
GND
+12V
C6
100nF
C7
100nF
C5
100uF
TITLE:
RX 23cm
pilotage tuner SF1216
BY: F6CSX
REV: B
DATE:
14/11/09
PAGE:
1/1